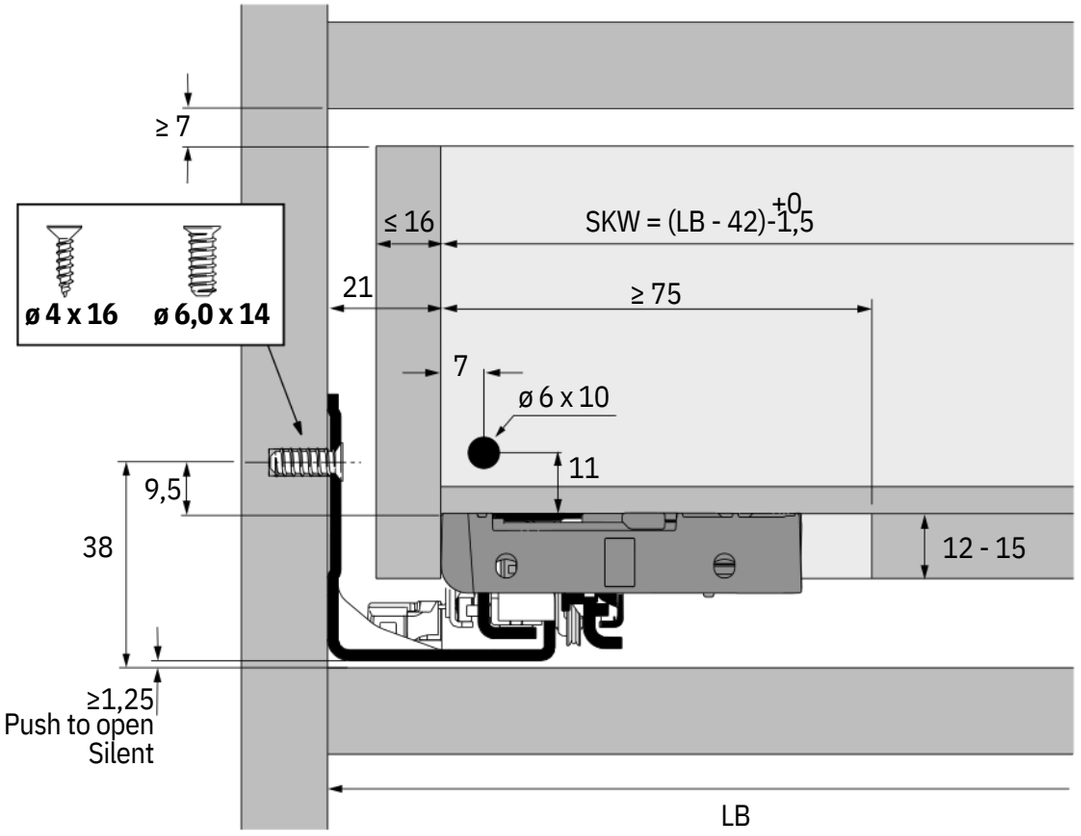
≥ 7
ø 4 x 16
ø 6,0 x 14
≤ 16
SKW = (LB - 42)-1,5 +0
21
≥ 75
7
ø 6 x 10
11
9,5
38
12 - 15
≥1,25
Push to open
Silent
LB

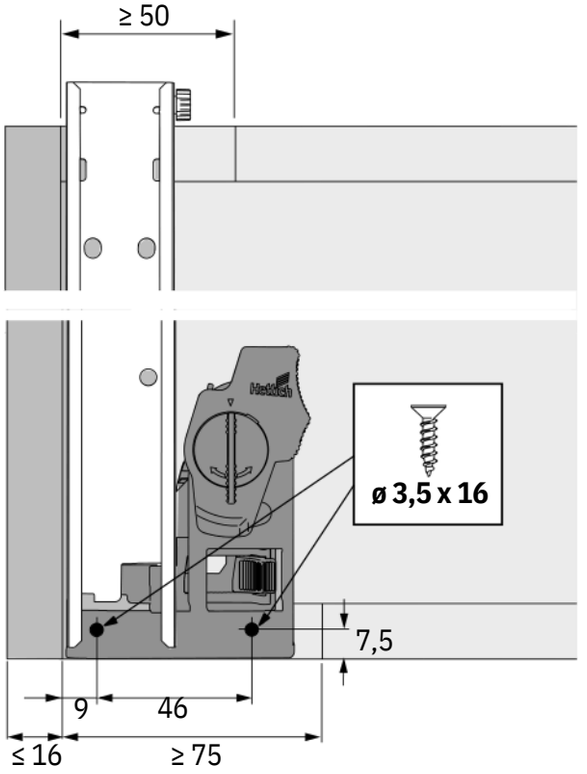
≥ 50
ø 3,5 x 16
7,5
9
46
≤ 16
≥ 75

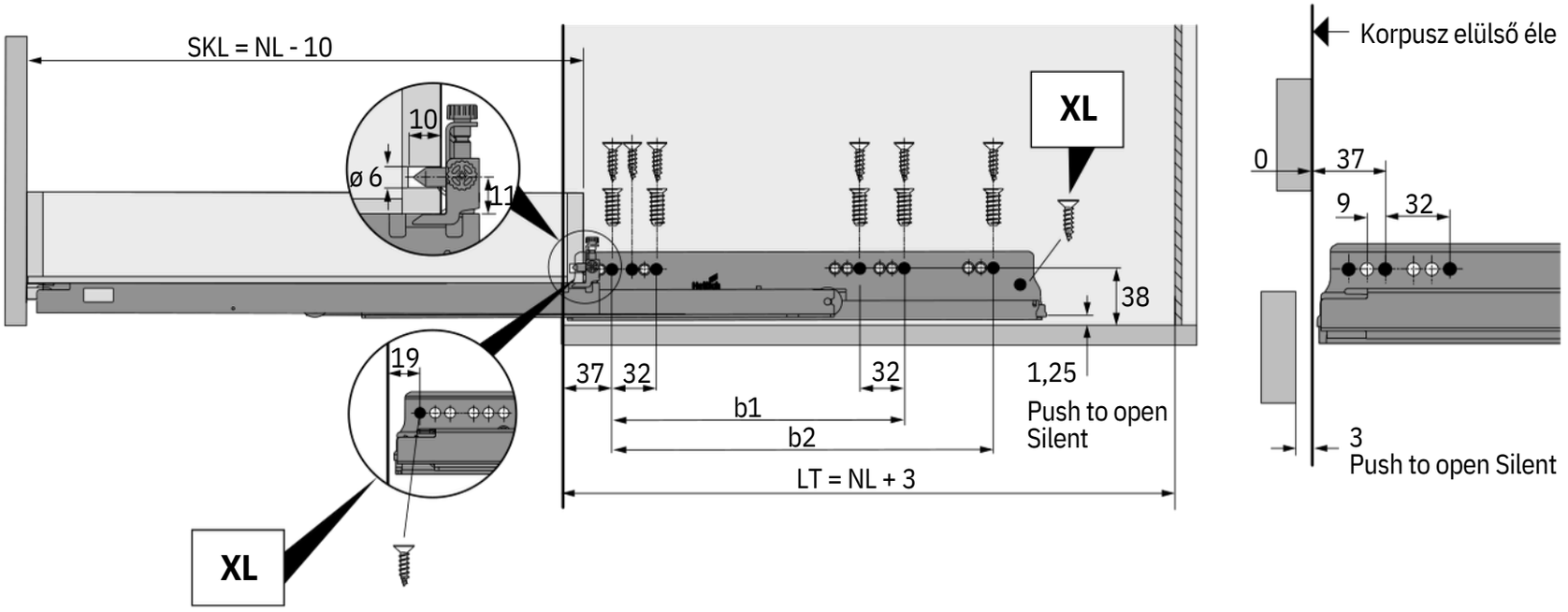
SKL = NL - 10
10
ø 6
11
19
XL
XL
37
32
32
b1
b2
LT = NL + 3
38
1,25
Push to open
Silent
Korpusz elülső éle
0
37
9
32
3
Push to open Silent